Hytera

OWNER'S MANUAL

DIGITAL PORTABLE RADIO

DIGITAL TRUNKING PORTABLE RADIO

Downloaded from www.Manualslib.com manuals search engine

Preface

Thanks for your favor in our product. This manual is helpful for you to quickly know how to use the product. For detailed features and operations, please refer to the Feature Description and Operation Manual along with the product.

To avoid body injury or property loss caused by misoperation, please read the Safety Information Booklet carefully before use.

This manual is applicable to the following product:

PD70Xi Digital Portable Radio (X may represent 2, 5, 6 or 8)

English

Downloaded from www.Manualslib.com manuals search engine

Icon Conventions

Indicates functions that are available on digital channel only.

Indicates functions that are available on analog channel only.

Functions marked with no icon are available on both analog and digital channels.

Disclaimer

Hytera Communications Corporation Limited (the Company) endeavors to achieve the accuracy and completeness of this manual, but no warranty of accuracy or reliability is given. All the specifications and designs are subject to change without notice due to continuous technology development. No part of this manual may be copied, modified, translated, or distributed in any manner without the express written permission of us.

We do not guarantee, for any particular purpose, the accuracy, validity, timeliness, legitimacy or completeness of the Third Party products and contents involved in this manual.

If you have any suggestions or would like to learn more details, please visit our website at: http://www.hytera.com.

RF Radiation Information

This product must be restricted to operations in an occupational/controlled RF exposure environment. Users must be fully aware of the hazards of the exposure and able to exercise control over their RF exposure to qualify for the higher exposure limits.

RF Radiation Profile

Radio Frequency (RF) is a frequency of electromagnetic radiation in the range at which radio signals are transmitted. RF technology is widely used in communication, medicine, food processing and other fields. It may generate radiation during use.

RF Radiation Safety

In order to ensure user health, experts from relevant industries including science, engineering, medicine and health work with international organizations to develop standards for safe exposure to RF radiation. These standards consist of:

- United States Federal Communications Commission, Code of Federal Regulations; 47CFR part 2 sub-part J;
- American National Standards Institute (ANSI)/ Institute of Electrical and Electronic Engineers (IEEE) C95. 1-1992;
- Institute of Electrical and Electronic Engineers (IEEE) C95.1-1999;
- International Commission on Non-Ionizing Radiation Protection (ICNIRP) 1998;

FCC Regulations

Federal Communication Commission (FCC) requires that all radio communication products should meet the requirements set forth in the above standards before they can be marketed in the U.S, and the manufacturer shall post a RF label on the product to inform users of operational instructions, so as to enhance their occupational health against exposure to RF energy.

EU Regulatory Conformance

As certified by the qualified laboratory, the product is in compliance with the essential requirements and other relevant provisions of the Directive 2014/53/EU.

Please note that the above information is applicable to EU countries only.

Downloaded from www.Manualslib.com manuals search engine

Contents

Items in the Package ---------- **2**
Product Overview ---------- **2**
Product Controls ---------- 2
Programmable Keys ---------- 2
LED Indicator ---------- 2
Before Use ---------- **3**
Attaching the Battery ---------- 3
Attaching the Antenna ---------- 3
Attaching the Belt Clip ---------- 3
Checking the Battery Power ---------- 4
Basic Operations ---------- **4**
Turning the Radio On/Off ---------- 4
Adjusting the Volume ---------- 4
Selecting a Zone ---------- 4
Selecting a Channel ---------- 4
Call Services ---------- **4**
Private Call ---------- 5
Group Call ---------- 5
Emergency Call ---------- 5
Available Features ---------- **5**
Troubleshooting ---------- **6**
Care and Cleaning ---------- **7**
Optional Accessories ---------- **8**

Downloaded from www.Manualslib.com manuals search engine

Items in the Package

Please unpack carefully and check if all items listed below are received. If any item is missing or damaged, please contact your dealer.

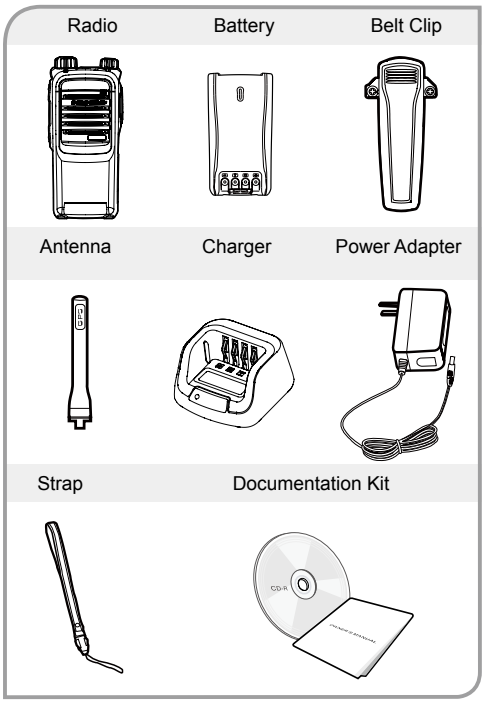

Note: The frequency band is marked on the label of antenna; if not, please refer to the label on the radio for frequency band information.

Product Overview

Product Controls

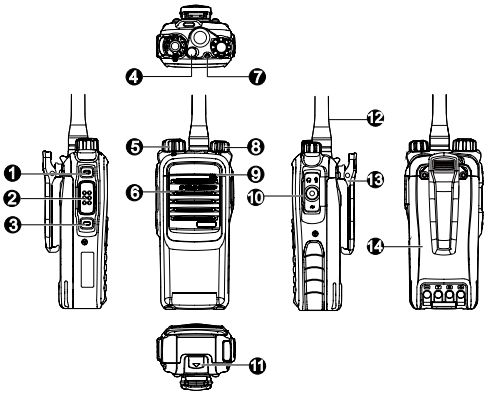

No.	Part Name	No.	Part Name
1	SK1 (Side Key 1)	8	Power On-Off/ Volume Control Knob
2	PTT (Push-to-Talk) Key	9	Microphone
3	SK2 (Side Key 2)	10	Accessory Connector
4	TK (Top Key)	11	Battery Latch
5	Channel Selector Knob	12	Antenna
6	Speaker	13	Belt Clip
7	LED Indicator	14	Battery

Programmable Keys

For enhanced convenience, you may request your dealer to program the **SK1**, **SK2**, and **TK** ( ) as shortcuts to certain functions. Please refer to the Feature Description and Operation Manual along with the product for more details.

Caution: The **TK** key is programmed with emergency feature by default (short press: Emergency On; long press: Emergency Off). It is programmable by your dealer.

LED Indicator

LED Indication	Radio Status
The LED indicator flashes green.	Powering on
The LED indicator glows green.	Receiving
The LED indicator glows red.	Transmitting
The LED indicator flashes orange slowly.	Scanning or Roaming
The LED indicator flashes orange rapidly.	Emergency
The LED indicator glows orange.	Call hung period. No voice is being transmitted or received on the traffic channel during a call. Within such period, you can hold down the **PTT** key to talk to the other party.

Downloaded from www.Manualslib.com manuals search engine

Before Use

Attaching the Battery

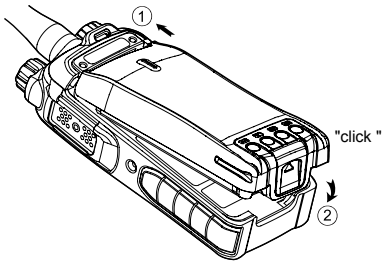

Note: To remove the battery, turn off the radio first, and then slide the battery latch upwards to unlock the battery.

Attaching the Antenna

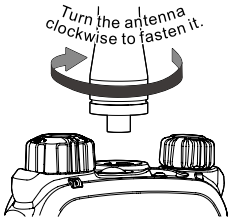

Caution: Do not hold the radio by its antenna, otherwise the performance and lifespan of the antenna will be reduced.

Attaching the Belt Clip

Step 1 Remove the screws.

Step 2 Align the screw holes on the belt clip with those on the radio's back, and then tighten the screws.

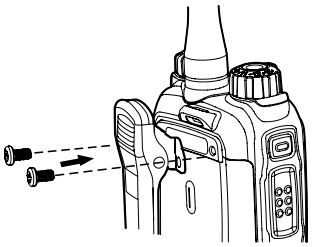

Attaching the Accessories

Step 1 Open the accessory connector cover as shown below.

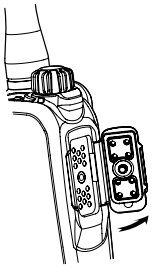

Step 2 Align the accessory (such as an audio accessory, or a programming cable) plug with the accessory connector.

Caution: Do not scrape the silicone rubber surrounding the accessory connector screw hole, in order to ensure the waterproof performance of the radio.

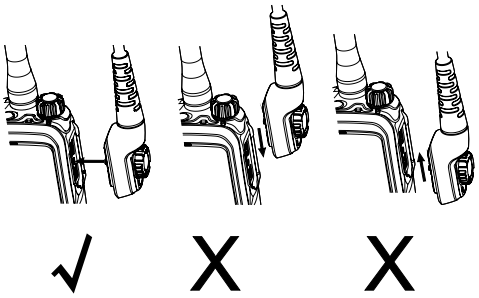

Step 3 Tighten the screw on the plug.

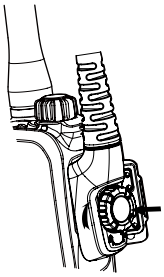

Charging the Battery

Caution:

- Use the charger specified by the Company to charge the battery.
- Make sure the radio is powered off before charging. Read the Safety Information Booklet in advance to get necessary safety information.
- Charge a new battery for at least 5 hours before initial use for best performance.

Downloaded from www.Manualslib.com manuals search engine

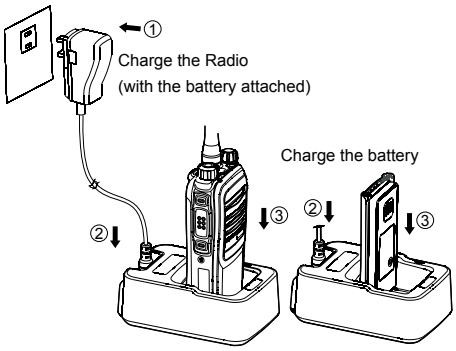

Charging Status Indication (on charger):

LED Indication	Charging Status
The LED Indicator flashes red slowly.	Standby (no load)
The LED Indicator glows red.	Charging
The LED indicator glows orange.	90% charged
The LED indicator glows green.	Fully charged
The LED Indicator flashes red rapidly.	Charging failed

Checking the Battery Power

You can check the current battery power by holding down the programmed **Battery Power Indicator** key preset by your dealer. And release the key to exit. Battery power indications and alert tone are listed below:

LED Indication/Tone	Battery Power
The LED Indicator glows green.	High
The LED Indicator glows orange.	Medium
The LED Indicator glows red.	Low
The LED Indicator glows red and an alert tone sounds.	The battery runs low. Please recharge or replace the battery for proper radio operation

Basic Operations

Turning the Radio On/Off

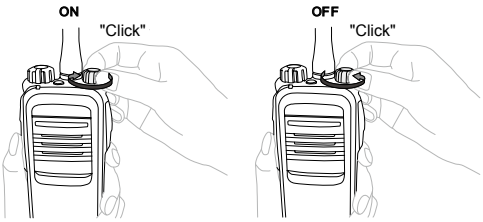

Adjusting the Volume

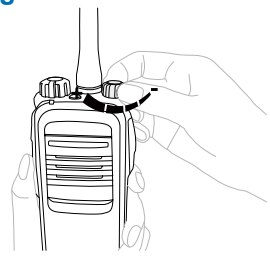

Selecting a Zone

A zone is a group of channels with the same property, which can facilitate convenient management over the channels. The radio supports 3 zones, each of which consists of up to 16 channels. Your dealer can program the zone for your specific needs. You can switch to the appropriate zone by pressing the programmed **Zone Up** or **Zone Down** key preset by your dealer.

Selecting a Channel

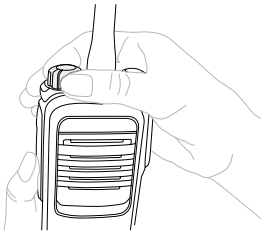

Note: If the Channel Notify feature is enabled by your dealer, the radio will announce the channel number upon channel switching.

Call Services

After the radio is powered on, you can make and receive calls. To ensure optimal volume of the receiving radio, keep the microphone about 2.5 to 5 centimeters away from your mouth when transmitting.

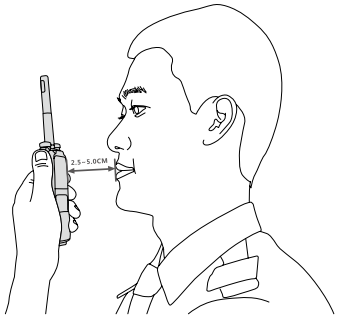

Downloaded from www.Manualslib.com manuals search engine

Private Call

Initiating a Private Call

In the standby mode, hold down the **PTT** key to initiate a private call to the private contact preset for the current channel.

You may request your dealer to preset a regular private call contact for each digital channel.

Receiving and Responding to a Private Call

When you receive a private call, you can listen to it without any operation and hold down the **PTT** key to call back within the preset time.

Group Call

Initiating a Group Call

In the standby mode, hold down the **PTT** key to initiate a group call to the group contact preset for the current channel.

Receiving and Responding to a Group Call

When you receive a group call, you can listen to it without any operation and hold down the **PTT** key to call back within the preset time.

Call on Analog Channel (No Signaling)

To transmit on an analog channel, hold down the **PTT** and speak into the microphone. To receive, release the **PTT** key.

Please refer to the Feature Description and Operation Manual along with the product for operation description on how to make and receive calls on the analog channel with signaling.

Emergency Call

In case of emergency, you can use Emergency Call to ask for help from your companion or the control center.

Emergency Call needs to be configured and enabled by your dealer. Please refer to the Feature Description and Operation Manual along with the product for details.

Available Features

Available features of this radio are listed below. Please refer to the Feature Description and Operation Manual for detailed feature descriptions.

Feature Type	Detailed Feature
Basic Setting	• Indication: LED, Tone, Vibration • Audio: Mic AGC, Treble Boost, LQO, Audio Feedback Suppression • Scanning: Scan On, Scan Off, Scan List • Other Features: Power Level, VOX, One Touch Call, Renting, Programming, Covert Mode
Digital Features	• Voice Services: Group Call, Private Call, All Call, • Control Services: Alert Call, Radio Check, Remote Monitor, Radio Enable, Radio Disable, Priority Interrupt, Time-out Timer (TOT) • Personal Security Services: Emergency Alarm, Man Down, Lone Worker • Encrypt • Network: Talk Around, Roam • Other Features: Pseudo Trunking
Analog Features	• Voice Services: Call without Signaling, Call with Signaling, • Control Services: Compandor, Time-out Timer (TOT), Monitor, Squelch Off, Squelch Level Adjustment, CTCSS/CDCSS • Personal Security Services: Emergency Alarm, Man Down, Lone Worker • Scrambler • Talk Around
API Features	• GPS Report • Radio Registration Service • Telemetry

Downloaded from www.Manualslib.com manuals search engine

Troubleshooting

Phenomena	Analysis	Solution
The radio cannot be powered on.	The battery may be improperly installed.	Remove the battery and then reattach it.
	The battery power may run out.	Recharge or replace the battery.
	The battery may suffer from poor contact caused by dirtied or damaged battery contacts.	Clean the battery contacts.
During receiving, the voice is weak, discontinuous or totally inactive.	The battery voltage may be low.	Recharge or replace the battery.
	The volume level may be low.	Increase the volume by rotating the **Volume Control Knob**.
	The antenna may get loose or may be improperly installed.	Turn off the radio and reattach the antenna.
	The speaker may be blocked or damaged.	Clean the surface of the speaker.
You cannot communicate with other members.	The frequency or signaling may be inconsistent with that of other members.	Set your TX/RX frequency and signaling to the same as that of other members.
	The channel type (digital and analog) may be set inconsistently.	Make sure all members are on the same digital or analog channel.
	You may be too far away from the group members.	Move towards other members.
Irrelevant communication or noise is heard on the channel.	You may be interrupted by radios using the same frequency.	Change the frequency, or adjust the squelch level.
	The radio may be set with no signaling.	Set signaling for all member radios to avoid interference at the same frequency.
The noise is too loud.	You may be too far away from other members.	Move towards other members.
	You may locate in an unfavorable position. For example, your communication may be blocked by high buildings or frustrated in the underground areas.	Move to an open and flat area, and restart the radio to try again.
	You may suffer from external disturbance (such as electromagnetic interference).	Stay away from equipment that may cause interference.

If the above solutions cannot fix your problems, or you may have some other queries, please contact us or your local dealer for more technical support.

Downloaded from www.Manualslib.com manuals search engine

Care and Cleaning

To guarantee optimal performance as well as a long service life of the product, please follow the tips below.

Product Care

- Do not pierce or scrape the product.
- Keep the product far away from substances that can corrode the circuit.
- Do not hold the product by its antenna or earpiece cable directly.
- Attach the accessory connector cover when the accessory is not in use.

Product Cleaning

Caution: Turn off the product and remove the battery before cleaning.

- Clean up the dust and fine particles on the product surface and charging piece with a clean and dry lint-free cloth or a brush regularly.
- Use neutral cleanser and a non-woven fabric to clean the keys, control knobs and front case after long-time use. Do not use chemical preparations such as stain removers, alcohol, sprays or oil preparations, so as to avoid surface case damage.
- Make sure the product is completely dry before use.

FCC Statement

This equipment has been tested and found to comply with the limits for a Class B digital device, pursuant to part 15 of FCC Rules. These limits are designed to provide reasonable protection against harmful interference in a residential installation. This equipment generates and can radiate radio frequency energy. If not installed and used in accordance with the instructions, it may cause harmful interference to radio communications. However, there is no guarantee that interference will not occur in a particular installation. Verification of harmful interference by this equipment to radio or television reception can be determined by turning it off and then on. The user is encouraged to try to correct the interference by one or more of the following measures:

- Reorient or relocate the receiving antenna. Increase the separation between the equipment and receiver.
- Connect the equipment into an outlet on a different circuit to that of the receiver's outlet.
- Consult the dealer or an experienced radio/TV technician for help.

Operation is subject to the following two conditions:

- This device may not cause harmful interference.
- This device must accept any interference received, including interference that may cause undesired operation.

Note: Changes or modifications to this unit not expressly approved by the party responsible for compliance could void the user's authority to operate the equipment.

RF Exposure Compliance and Control Guidelines and Operating Instructions

To control your exposure and ensure compliance with the occupational/controlled environmental exposure limits, always adhere to the following procedures.

Guidelines:

- Do not remove the RF Exposure Label from the device.
- User awareness instructions should accompany device when transferred to other users.
- Do not use this device if the operational requirements described herein are not met.

Operating Instructions:

- Transmit no more than the rated duty factor of 50% of the time. To transmit (talk), push the Push-To-Talk (PTT) key. To receive calls, release the PTT key. Transmitting 50% of the time, or less, is important because the radio generates measurable RF energy only when transmitting (in terms of measuring for standards compliance).
- Keep the radio unit at least 2.5 cm away from the face. Keeping the radio at the proper distance is important as RF exposure decreases with distance from the antenna. The antenna should be kept away from the face and eyes.
- When worn on the body, always place the radio in a Hytera-approved holder, holster, case, or body harness or by use of the correct clip for this product. Use of non-approved accessories may result in exposure levels which exceed the FCC's occupational/controlled environmental RF exposure limits.
- Use of non-approved antennas, batteries, and accessories causes the radio to exceed the FCC RF exposure guidelines.
- Contact your local dealer for the optional accessories of the product.

Downloaded from www.Manualslib.com manuals search engine

Optional Accessories

The following items are the main optional accessories for the product, and please consult your local dealer for more other accessories.

Caution: Use the accessories specified by the Company only. If not, the Company shall not be liable for any loss or damage arising out of use of unauthorized accessories.

Downloaded from www.Manualslib.com manuals search engine

Hytera
is the trademark or registered trademark of Hytera Communications Corporation Limited.
© 2015 Hytera Communications Corporation Limited. All Rights Reserved.

Address: HYT Tower, Hi-Tech Industrial Park North, Beihuan
RD., Nanshan District, Shenzhen, China
Postcode:518057
http://www.hytera.com

Z04313 H05658
811PD70001600

Downloaded from www.Manualslib.com manuals search engine